NCF2 (Normal-duty)

Flange Units (Square)

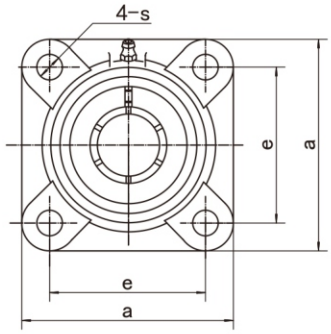

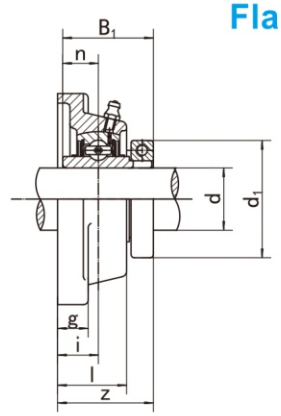

Unit NO.	Dimensions (mm / in.)											Bolt Size mm/in	Bearing No.	Housing No.	Weight (kg)
	d	d1	a	e	i	g	l	s	z	B1	n				
NCF204	20	44.5	86	64	15	12	25.5	12	34.8	33.4	12.7	M10	NC204	F204	0.69
204-12	3/4	1-3/4	3-3/8	2-32/64	19/32	15/32	1	15/32	1-3/8	1.315	0.500	3/8	NC204-12		
NCF205	25	49.2	95	70	16	14	27	12	38.2	36.5	14.3	M10	NC205		
205-14	7/8												NC205-14	F205	0.94
205-15	15/16	1-15/16	3-3/4	2-3/4	5/8	35/64	1-1/16	15/32	1-1/2	1.437	0.563	3/8	NC205-15		
205-16	1												NC205-16		
NCF206	30	55.6	108	83	18	14	31	12	41.8	39.7	15.9	M10	NC206		
206-18	1-1/8												NC206-18	F206	1.22
206-19	1-3/16	2-3/16	4-1/4	3-17/64	45/64	35/64	1-7/32	15/32	1-21/32	1.563	0.626	3/8	NC206-19		
206-20	1-1/4												NC206-20		
NCF207	35	65.1	117	92	19	16	34	14	46.0	44.5	17.5	M12	NC207		
207-20	1-1/4	2-7/16											NC207-20	F207	1.69
207-22	1-3/8	2-9/16	4-39/64	3-5/8	3/4	5/8	1-11/32	35/64	1-13/16	1.752	0.740	7/16	NC207-22		
207-23	1-7/16												NC207-23		
NCF208	40	68.3	130	102	21	16	36	16	52.8	50.8	19.0	M14	NC208	F208	2.07
208-24	1-1/2	2-11/16	5-1/8	4-1/64	53/64	5/8	1-13/32	5/8	2-3/32	2	0.748	1/2	NC208-24		
NCF209	45	74.6	137	105	22	18	38	16	53.8	50.8	19.0	M14	NC209		
209-26	1-5/8	2-13/16											NC209-26	F209	2.45
209-27	1-11/16	2-15/16	7-15/32	5-53/64	55/64	23/32	1-1/2	5/8	2-1/8	2	0.748	1/2	NC209-27		
209-28	1-3/4												NC209-28		
NCF210	50	85.7	143	111	22	18	40	16	56.1	53.1	19.0	M16	NC210		
210-31	1-15/16	3-3/8	5-5/8	4-3/8	55/64	23/32	1-37/64	5/8	2-7/32	2.091	0.748	5/8	NC210-31	F210	3.00
210-32	2												NC210-32		
NCF211	55	92.1	162	130	25	20	43	19	59.9	57.1	22.2	M16	NC211		
210-32	2	3-1/2	6-3/8	5-1/8	63/64	25/32	1-11/16	3/4	2-11/32	2.248	0.874	5/8	NC211-32	F211	3.63
211-35	2-3/16	3-5/8											NC211-35		
NCF212	60	104.8	175	143	29	20	48	19	70.3	66.7	25.4	M16	NC212		
212-36	2-1/4	4-1/16	6-7/8	5-5/8	1-9/64	25/32	1-7/8	3/4	2-25/32	2.626	1.000	5/8	NC212-36	F212	4.76
212-39	2-7/16	4-1/8											NC212-39		